INSTRUCTION SHEET
For Type GH505 — 23″ D-c Magnetic Shoe Brake

DESCRIPTION OF OPERATION

On this brake, the magnet coil is a separately enclosed unit mounted between an inner and outer armature. When the coil is properly energized, the armatures are attracted to each other until their outer poles seal. The movement of the armatures moves the shoes away from the wheel. The inner armature moves the inner shoe and the outer armature moves the outer shoe. When the coil is de-energized, the spring in the outer armature forces the armatures apart and presses the shoes against the wheel.

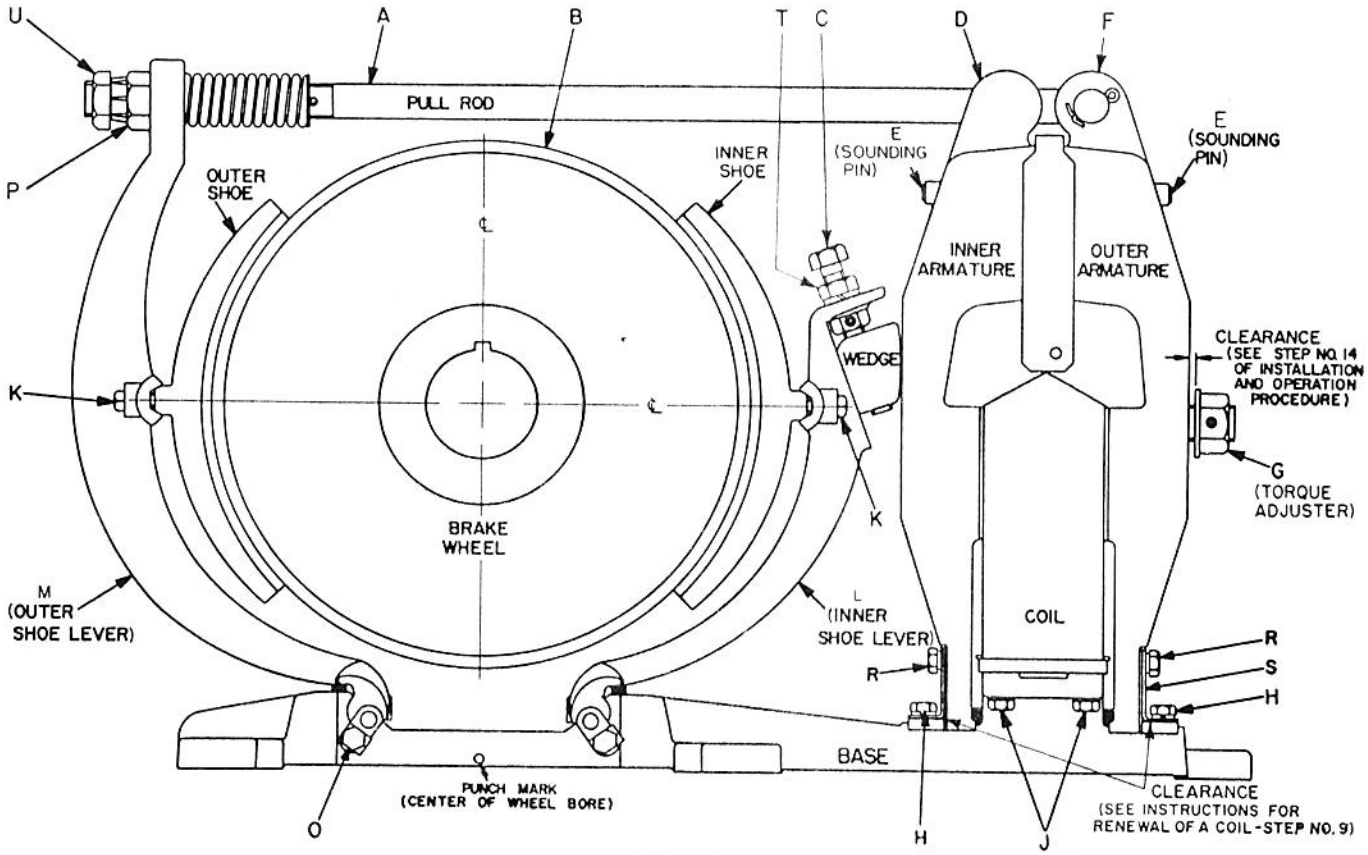

Figure 1

PROCEDURE FOR INSTALLATION AND OPERATION
(Refer to Dimension Drawing for Mounting Dimensions)

1—Assemble brake wheel "B" on the motor shaft.

2—Back off locknut "U" and nut "P" about one inch.

3—Back off locknut "T" and turn screw "C" clockwise to lift the wedge at the top of the inner shoe lever "L".

4—Slide the brake into place around the brake wheel "B" and start the bolts into the base mounting surface.

5—Loosen the holding screws "K" on both shoe levers leaving only a light grip.

6—Push the shoe levers "M" and "L" against the brake wheel "B" and check whether the shoes fit evenly across the wheel face.

7—Bump the base into the best position to get the most favorable fit of the shoes against the wheel "B". ℄ of wheel must be aligned with punch mark of base to obtain proper horizontal positioning of brake, and with ℄ of shoe pivot sockets to obtain the proper vertical positioning of the brake.

8—If the mounting surface is not flat or is not parallel to the shaft axis, shimming may be necessary. Tighten the holding bolts to hold the base firmly in place.

PROCEDURE FOR INSTALLATION AND OPERATION — (Continued)

9—Be sure there is some spring pressure tending to separate the two armatures "D" and "F". This can be tested by turning nut "G" clockwise. If nut "G" cannot be turned, the gland inside is tight against the stop on the screw and a maximum spring pressure is applied.

10—Turn the screw "C" on the top of the inner shoe lever counter-clockwise to move the wedge downward until the inner armature "D" sounding pin "E" is flush when pressed. Tighten locknut "T". Readjust after wheel has reached its normal operating temperature to allow for thermal expansion of the brake wheel. Recheck after several operations.

11—Tighten the pull rod nut "P" until the outer armature "F" sounding pin "E" is flush when pressed. Tighten locknut "U". Readjust after wheel has reached its normal operating temperature to allow for thermal expansion of the brake wheel. Recheck after several operations.

12—Full torque is obtained by turning the torque adjuster "G" until the gland inside is snug against the stop. Less than full torque is obtained by turning the torque adjuster "G" counter-clockwise. Check the nameplate on the brake and the table in paragraph 14 for the maximum torque setting for the duty rating of the brake.

13—With the brake set, tighten screws "K" on the shoes.

14—Note that when the brake is properly adjusted for proper stroke, the torque-adjuster washer face stands clear of the armature "F" surface. As the lining wears this clearance decreases. If the adjustment is neglected the brake operation becomes sluggish and when the torque-adjuster washer touches the armature the torque drops rapidly reaching zero when the flexure of the lever is used up. The clearance dimension is not a measurable value but is determined by proper adjustment of individual brakes.

TORQUE ADJUSTMENT

Size of Brake	Winding	Duty	Rated Torque (Lb. Ft.)	Turn G Clockwise to Solid	Back Off Turns of G from Solid
23"	Shunt	Intermittent	4000	x	0
	Shunt	Continuous	3000	x	1-5/6
	Series	½ Hour	4000	x	0
	Series	1 Hour	2600	x	2-3/6
Minimum Torque			2000	x	3-4/6

RENEWAL PARTS

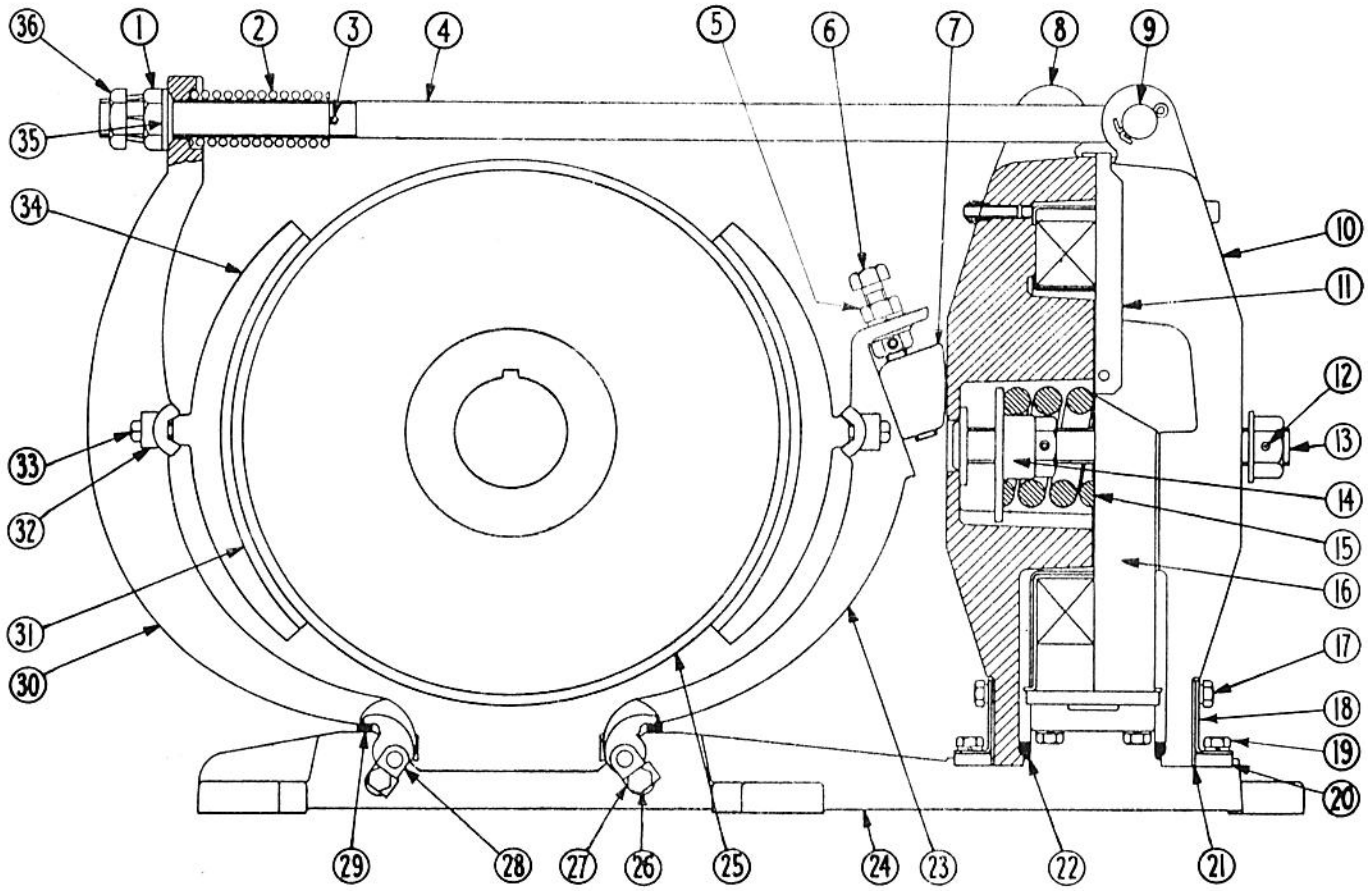

Figure 2

RENEWAL PARTS — Information Required

(Refer to Fig. 2, Page 2)

Parts **CANNOT** be sent promptly unless you include the **FOLLOWING** with your order: **PUBLICATION NO. 17228, ITEM NO., PART NO., DESCRIPTION** and **COMPLETE NAMEPLATE DATA ON THE BRAKE**

Item No.	Description of Part	No. Req.	Part No.
1	Nut 1½"-6	1	15-673
2	Compression spring	1	69-1987
3	Spring pin 5/16" x 2¼" long	1	13-3186-13
4	Pull rod (includes items 2 & 3)	1	61-1008-3
5	Locknut ⅞"-9	1	915-1682Z
6	Hex bolt ⅞"-9 x 5.50	1	11-4633
7	Adjusting wedge	1	54-2764
8	Armature (inner)	1	48-636-4
9	Pin	1	13-1181-16
10	Armature (outer) (includes item 11)	1	48-636-12
11	Rubber guard	1	73-1017-6
12	Spring pin 5/16" x 1¾" long	1	13-3186-12
13	Adjusting screw complete (includes items 12 and 14)	1	11-4625-6
14	Gland	1	49-2201-2
15	Compression spring	1	69-1692
16	Coil (Give No. on Coil)	1	.....
17	Self-lock screw	4	11-4642
18	Bracket	2	79-15572-5
19	Hex screw ⅝"-11 x 1.25	4	11-3558
20	Stop block	2	19-972-6
*21	Stop plate	2	.....
	.093 thick	..	19-972-7
	.102 thick	..	19-1688-4
	.105 thick	..	19-972-17
22	Gasket	2	32-467-11
23	Shoe lever (inner) (includes item 6)	1	24-3304-8
24	Base (includes items 22, 26, 27, 28 and 29)	1	17-8047
25	Brake wheel (give complete nameplate data)	1	.....
26	Screw (⅝-11 x ⅝" long)	4	11-2051-2
27	Locking bracket	4	79-4180-28
28	Plate	4	55-1548
29	Gasket	2	32-467-6
30	Shoe lever (outer)	1	24-3305-4
31	Shoe lining	2	48-1818-6
	Groov-Pin	80	13-4762
32	Clamp	4	55-1039
33	Self-lock screw ⅝-11 x 2.75	4	11-3046-4
34	Shoe complete (includes item 31)	2	48-633-4
35	Washer	1	16-1598-5
36	Locknut 1½-6	1	915-2382Z

*Choose the plate thickness which gives the minimum gap between the armature item 10, the stop block item 20, and the base item 24. Sounding Pin is Part No. 13-3485-3.

RENEWAL OF BRAKE SHOE LININGS
Linings Fastened with Groov-Pins

1—After removing the old lining and Groov-pins, clamp the new lining so it lies closely in the shoe.

2—Drill through the lining from the rear of the shoe (drill with No. 13 (.185 drill).

3—Counterbore 9/16" to dimensions shown in the sketch to the right. Bottom of counterbore to be 135° included angle. (Number of holes required — see table below).

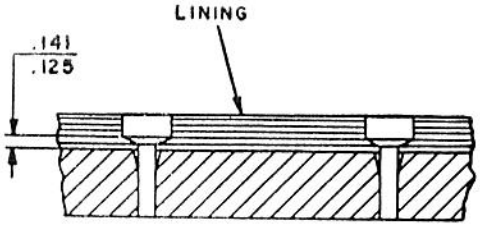

SECTION THROUGH SHOE ASSEMBLY

BRAKE LININGS FASTENED WITH GROOV-PIN

Brake Size	Groov-Pin		Hole in Lining	Hole in Shoe	Counterbore Lining
	No. Req'd for Each Shoe	Part No.			
23"	30	813-158	#13 (.185")	3/16" Ream and 20° Cts'k. to .210-.220 Diameter	9/16" Diameter, Depth per Sketch above.

PROCEDURE FOR REMOVAL OF A SHOE
(Refer to Fig. 1, Page 1)

1—Back off locknut "U" and nut "P" on the pull rod "A", or turn screw "C" clockwise to lift the wedge to relieve the pressure between the chosen shoe and wheel.

2—Remove screws "K" from the shoe which is to be taken out.

3—Slide the shoe out sideways.

4—When replacing a shoe slide it into the groove and put in the screws loosely.

5—Press the shoe against the wheel and tighten screws "K".

6—Readjust the brake.

PROCEDURE FOR REMOVAL OF A SHOE LEVER
(Refer to Fig. 1, Page 1)

1—If it is desired to remove the outer shoe lever "M", locknut "U" and nut "P" are backed off until the pull rod "A" may be lifted up around the pivot in the outer armature "F".

2—Refer to "O". Both sides of the shoe lever are equipped with a lock bracket, screw and retainer plate. Bend back the tab on the lock bracket. Remove the screw and retainer plate. When reinstalling parts, and after tightening the hex screw, bend the tab of the lock bracket against the flat of the screw.

3—With the retaining plate removed, slide the outer shoe lever "M" out sideways.

4—To remove the inner shoe lever "L", loosen locknut "T" and turn screw "C" clockwise until the pressure of the shoe against the wheel is relieved. Refer to "O". Both sides of the shoe lever are equipped with a lock bracket, screw and a retainer plate. Bend back the tab on the lock bracket. Remove the screw and retainer plate. When reinstalling parts, and after tightening the hex screw, bend the tab of the lock bracket against the flat of the screw.

5—With the retaining plate removed, slide the inner shoe lever "L" out sideways.

RENEWAL OF A COIL
(Refer to Fig. 1, Page 1)

1—Turn torque adjuster "G" counter-clockwise until the torque spring is loose.

2—Disconnect the pull end from the outer armature "F".

3—Remove screws "H" from the base.

4—Lift the armature "F" out of the groove in the base and pull it outward.

5—Remove the screws "J" which attach the coil to the pedestal and slide the coil off the pedestal.

6—Set the new coil on the pedestal and turn screws "J" in loosely.

7—Set the armature "F" back into position. The spring gland must be centered in the hole of the inner armature "D". Assemble angle spring "S", lock strips, stop block and screws "H" and "R" with the screws slightly loose.

8—Attach pull rod "A" to armature "F".

9—Pull armatures "F" and "D" together magnetically or by means of a clamp. Tighten screws "H" on the base such that a clearance of 0.025" ± 0.015" will be maintained between the armature "F" and bracket "S". The clearance should be measured at the minimum point and should be uniform. Remove clamp if used.

10—Adjust the torque spring and shoe positions as described in the section under installation.

PROCEDURE FOR READJUSTMENT WHEN LININGS WEAR
(Refer to Fig. 1, Page 1)

Periodic checks should be made on the installation and when the sounding pins "E" depress more than 1/64 inch below the surface, adjustments should be made to compensate for the wear of the lining. This check and adjustments should be made when wheel is at its normal operating temperature to allow for thermal expansion of the wheel. Recheck after several operations.

1—Loosen locknut "U". Tighten nut "P" on the outer end of pull rod "A" until the sounding pin in the outer armature is flush with the surface when it is pressed.

2—Loosen locknut "T". Turn the screw "C" counter-clockwise to move the wedge downward until the inner armature sounding pin is flush when it is pressed inward.

3—Tighten locknuts "U" and "T".

It is recommended that brake shoe linings be replaced when the lining thickness at the center of the shoe has decreased to ⅛ inch. (See paragraph 14, Page 2.)

DO NOT REDUCE FILE IN R-050

B **70-7063** SH 1

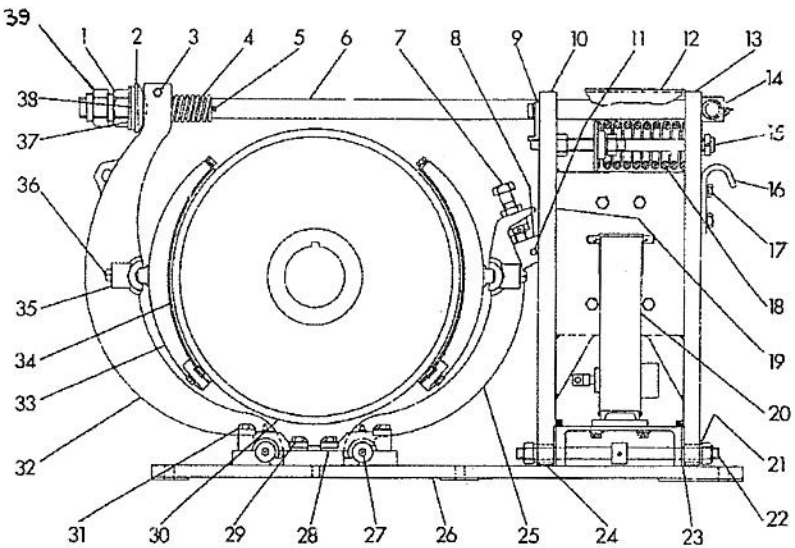

FIGURE 1

FOR INSTALLATION INSTRUCTION DRAWING, SEE 670-7063 SHEET NO. 2 AND NO 3.

Item No.	Description of Part	No. Req.	Part No.
1	HEX NUT 2" x 4.50	1	15-2161
2	5.00 Spherical Washer	1	16-1981
3	Hex Head Screw 1/2 13 x 7.00 Long	1	11-1908
	1/2 13 Locknut	1	15-610
4	Compression Spring	1	69-2091
5	Spring Pin 5/16 x 2.75 Long	1	13-3186-21
6	Pull Rod	1	61-1869
	Bushing	1	29-3651
	1/8 Grease Fitting	1	27-468
7	Wedge Adjusting Screw (Assembly)	1	24-6385-2
8	Adjusting Wedge	1	54-4986
9	Lock Plate	1	52-1646
	Hex Hd. Screw 5/8-11 x 1.50 lg.	2	911-6006Z
	Helical Washer 5/8	2	916-1363Z
10	Magnet Armature (inner)	1	48-1630-2
11	1/8 Grease Fitting	1	27-82
12	Cover	1	73-2085
13	Magnet Armature (outer – includes items 16 and 17)	1	48-1630
14	Pin	1	13-5758-2
	Cotter Pin	2	913-465
	2.25 Washer	2	16-3191
15	Adjusting Screw Assembly	2	11-3255
16	Hook	2	52-1079
17	Hex Head Screw 1/2-13 x 1.75 Long	4	11-327
	Helical Washer	4	916-199
18	Compression Spring	2	69-2090
19	Rubber Guard (not shown)	1	73-1017-6
20	Coil (give complete nameplate stamping)	1	.....
21	Spring Plate	2	16-1747
22	Stud	2	14-527
23	Strap	2	18-59-5
	Shim	1	18-59-9
24	Bushing	4	29-2779-5
25	Inner Shoe Lever (includes Item 7)	1	24-6385
26	Base	1	17-12017
27	3/8 Grease Fitting	4	27-1181
28	Bearing Cap	4	20-1439
	1/8-45° Grease Fitting	4	27-842
29	Hex Head Screw 3/4-10 x 3.00 long (high strength)	4	11-5555
	Lock Bracket	8	79-4180-18
30	Brake Wheel (give complete nameplate stamping)	1	.....
31	Hex Head Screw 3/4-10 x 4.00 long (high strength)	4	911-6056Z
32	Outer Shoe Lever	1	24-5795
33	Shoe Complete (includes Item 34)	2	48-1277-2
	Hex Head Screw 3/8-16 x 1.25 lg.	8	911-5650Z
	Helical Washer	8	916-231
34	Shoe Lining	2	48-1278-3
35	Clamp	4	55-2195
36	Self Locking Screw	4	11-3046
37	4.50 Washer	1	16-1982
38	Fabreeka Washer	1	16-1983
39	HEX JAM NUT	1	15-2162

WHEN ORDERING RENEWAL PARTS, GIVE THIS DRAWING NO. (70-7063) ITEM NO., DESCRIPTION, PART NO., AND COMPLETE NAMEPLATE DATA

ORDER NO DM53-3201-10

A	ITEM 10 WAS 48-1490 ITEM 13 WAS 48-1260	DM.53-0156-10	E	REMOVED PUNCH MARK FROM BASE.	DM53-3200-10
B	IT. 33 WAS 48-1277, IT. 34 WAS 48-1278.	DM53-1759-10	F	IT. 50 PART NO. WAS 11-356	DM53-3200-10
C	ITEM 14 WAS Pin 13-5758. ADDED 2.25 Washer TO ITEM 14.	DM53-3200-10	G		
D	IT. 1 WAS P/N 15-958 & QTY. OF 2. ADDED IT. 39	DM53-3200-10	H		

TITLE RENEWAL PARTS DRAWING FOR BULLETIN 505 --30" BRAKE

REQUIREMENTS OF 50-2500 SHALL APPLY TO THIS DRAWING UNLESS OTHERWISE SPECIFIED.
DIMENSIONS BEFORE COATING ARE SPECIFIED — ALLOWANCES HAVE BEEN MADE FOR COATINGS EXCEPT ON THREADS.

CUTLER • HAMMER

BASIC SPECS SUMMARY

DR. R. A. Carr 1-13-75
CHK. R. O'Neilen 1-22-75
APP. R.E. ZEPNICK 8-10-75

RAW MAT. DESCR.
PART NO. SPEC.
SURFACE COATING
FIRST ASSEM. WHERE LISTED DBB-2624
SCALE
SUP'S NON-INTERCHANGEABLE
DO NOT SCALE DRAWING, WORK ACCORDING TO DIMENSIONS
SUP'D BY NON-INTERCHANGEABLE

FORM 35

DO NOT REDUCE

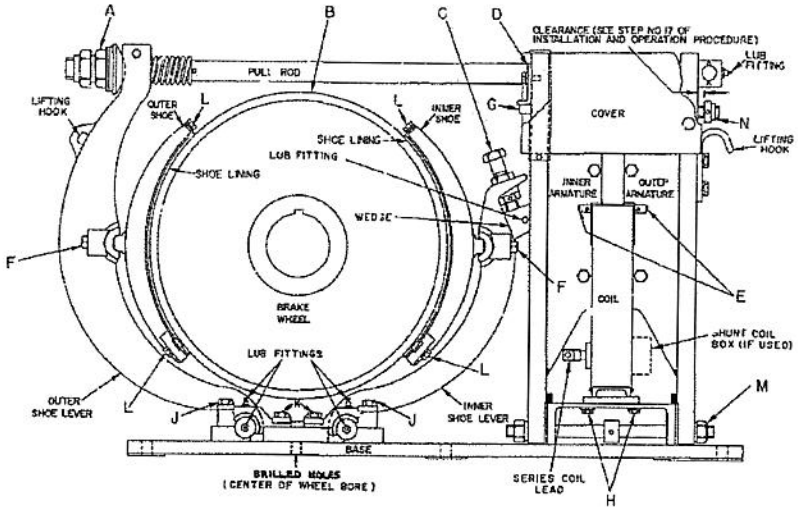

FIGURE 2

Bulletin 505 — 30" D-c Magnetic Shoe Brake

DESCRIPTION OF OPERATION

On this brake, the magnet coil is a separately enclosed unit mounted between an inner and outer armature. When the coil is properly energized, both armatures are attracted to each other. The movement of the armatures moves the shoes away from the wheel. The inner armature moves the inner shoe and the outer armature moves the outer shoe. When the coil is de-energized, two springs (item 18 in figure 1) force the armatures apart and press the shoes against the wheel.

FOR RENEWAL PARTS SEE DRAWING B70-7063 SHEET 1

PROCEDURE FOR INSTALLATION AND OPERATION

(Refer to Dimension Drawing for Mounting Dimensions)

1—Assemble brake wheel "B" on the motor shaft.

2—(a) Refer to figure 1, sheet 1. Remove the cover item 12 by removing the cap screws on each side and the rubber shroud.
(b) Refer to figure 2. Remove the torque adjuster lock strap "D".
(c) Turn the two torque adjustor screws "G" clockwise until the torque springs are loose.

3—Back off the pull rod nuts "A" about 1 inch.

4—Loosen lock nut and turn the screw "C" clockwise to lift the wedge at the top of the inner shoe lever.

5—Provide a solid surface to support the entire base of the brake. Slide the brake into place around the brake wheel and start the bolts into the base mounting surface. Align punch mark on base with center of shaft.

6—Loosen the holding screws "F" on both shoe levers leaving only a light grip.

7—Turn both torque adjusting screws "G" counterclockwise an equal number of turns until the entire surface of both shoes are just touching the brake wheel. To do this, it may be necessary to also turn nuts "A" clockwise and screw "C" counterclockwise.

8—Bump the base into the best position to get the most favorable fit of the shoes against the wheel. Be sure the shoes do not hang over the edge of the wheel.

9—Tighten screws "F" on both shoe levers.

10—If the mounting surface is not flat or is not parallel to the shaft axis, shimming may be necessary. Tighten the mounting bolts to hold the base firmly in place.

11—Turn the two torque adjusting screws "G" until the glands are tight against the stops on the screws if this had not been accomplished per paragraph 7. This will set the torque springs for the maximum torque rating of the brake.

12—When the brake is properly adjusted, both sounding pins "E" are flush when pressed inward (brake coil is de-energized). To accomplish this, proceed as follows: a. Energize the brake coil. b. Turn screw "C" counterclockwise to adjust the sounding pin "E" on the inner armature. c. Turn nuts "A" clockwise to adjust sounding pin "E" on the outer armature. d. De-energize the coil and check the sounding pins. e. Repeat until both sounding pins are flush with the surface when pressed inward. (see paragraph 19)

13—Loosen mounting bolts and operate the brake for a few cycles of releasing and applying. The brake will then correct itself for any small errors in alignment. **NOTE:** The base mounting bolts should be turned just snug enough to allow the base to shift.

14—Tighten the mounting bolts to hold the base firmly in position.

15—Re-adjust sounding pin settings, if necessary as instructed in paragraph 12.

16—Adjustments for less than full torque are made by the two torque adjusting screws "G". When both glands are tight against the stops on the screws, the two adjusting screws cannot be turned counterclockwise any further, and torque is maximum. To obtain reduced torque, turn EACH torque adjusting screw clockwise an EQUAL number of turns. Failure to do so results in improper operation of the armatures. Standard torque ratings adjustments are marked on the nameplate. (see table on sheet 3)

17—Note that when the brake is properly adjusted, there is a clearance between the outer armature surface and the inner surface of each torque-adjusting-screw nut "N". As the lining wears, this clearance decreases. If the adjustment is neglected, the brake operation becomes sluggish and when the clearance becomes zero, the torque drops rapidly, reaching zero when the flexure of the lever is used up. The clearance dimension is not a measurable value but is determined by proper adjustment of individual brakes.

18—Replace the torque adjustor lock plate item 9 and the cover item 12, (Figure 1, sheet 1).

19—In the event that the sounding pins are missing or (A) have been mutilated, the following proceedure may be used. The gap at the top of the armatures should be .242 inch with the coil de-energized. The gap between the INNER armature and the coil shield should be approximately 2/3 of the gap between the OUTER armature and the coil shield. This allows the INNER armature to take up 40% of the movement and the OUTER armature to take up 60% of the movement of the armatures to close when the coil is energized.

The above proceedure should provide a clearance between shoes and wheel of 1/64 to 1/32 inch with the coil energized. This clearance should be fairly equal all the way around the lining area and both sides of the wheel.

ORDER NO DM53-3201-10

A CHGD. NOTE 19	DY 8-14-90 DM53-3200-10	E	
B REMOVED PUNCH MARK FROM BASE	MLZ 10-17-78 DM53-3800-10	F	
C		G	
D		H	

TITLE
INSTALLATION AND INSTRUCTION DRAWING FOR BULLETIN 505—30" BRAKE

REQUIREMENTS OF 50-2500 SHALL APPLY TO THIS DRAWING UNLESS OTHERWISE SPECIFIED.
DIMENSIONS BEFORE COATING ARE SPECIFIED — ALLOWANCES HAVE BEEN MADE FOR COATINGS EXCEPT ON THREADS.

CUTLER • HAMMER

BASIC SPECS. SUMMARY

DR. R. A. Carr	1-19-75	
CHK. R. Visscher	1-22-75	
APP. R.E. ZEPNICK	1/5/75	

RAW MAT. DESCR.
PART NO
SPEC.
SURFACE COATING
FIRST ASSEM WHERE LISTED D88-2624
SCALE
SUP'S NON-INTERCHANGEABLE
DO NOT SCALE DRAWING. WORK ACCORDING TO DIMENSIONS
SUP'D BY NON-INTERCHANGEABLE

PROCEDURE FOR REPLACING A COIL

1—(a) Refer to figure 1, sheet 1. Remove the cover item 12 by removing the cap screws on each side and the rubber shroud.

(b) Remove the torque adjustor lock plate item 9.

2—Refer to Figure 2 Sheet 2. Turn the two torque adjustor screws "G" clockwise until the torque springs are loose.

3—Back off nuts "A" and disconnect the pull rod end from the outer armature at the top.

4—Remove the nuts "M".

5—Lift the armature and move outward off the studs.

6—Remove the screws "H" which attach the coil to the pedestal and slide the coil off the pedestal.

7—Set the new coil on the pedestal and turn screws "H" in loosely.

8—Set the armature back in place and fasten it to the base.

9—Attach the pull rod.

10—Pull armatures together magnetically and tighten screws "H".

11—(a) Adjust the torque springs and sounding pins as described in paragraphs 11, 12 and 16 of the installation instructions.

(b) Replace the adjustor lock plate item 9.

12—Replace cover and rubber shroud.

PROCEDURE FOR REMOVAL OF A SHOE LEVER

1—(a) Refer to figure 1, sheet 1. Remove the cover item 12 by removing the cap screws on each side and rubber shroud.

(b) Remove the torque adjustor lock plate item 9.

(c) Refer to figure 2, sheet 2. Turn the two torque adjustor screws "G" clockwise until the torque springs are loose.

2—Remove shoe

3—Remove screws "J", "K" and bearing caps for the chosen shoe lever.

4—If the outer shoe lever is to be removed, nuts "A" are backed off until the pull rod may be lifted up around the pivot in the outer armature.

5—Slide the shoe lever out sideways.

6—After replacing the shoe lever, lubricate the bearing caps with Warren Refining and Chemical Co. Plastilube #2 or equal.

7—Re-assemble the shoe and adjust as described in paragraphs 12 and 16 of the installation instructions.

8—Replace the torque adjustor lock plate item 9 and the cover item 12.

PROCEDURE FOR REMOVAL OF A SHOE LINING

(Refer to Figure 2 Sheet 2)

1—Back off nuts "A" on the pull rod and turn screw "C" to lift the wedge so as to increase the clearance between the chosen shoe and wheel.

2—Remove screws "L" from the lining which is to be taken out.

3—Slide the lining out sideways.

4—When replacing a lining slide it in sideways paying particular attention that the key on the lined insert is securely bottomed in the keyslot of the shoe before replacing lower screws "L". Insert and tighten upper screws "L" last.

5—Adjust the sounding pin settings and torque springs as described in paragraphs 12 and 16 of the installation instructions.

PROCEDURE FOR READJUSTMENT WHEN LININGS WEAR

(Refer to Figure 2 Sheet 2)

Periodic checks should be made on the installation and when the sounding pins depress more than 1/64 inch below the surface (when the brake coil is de-energized), adjustments should be made to compensate for the wear of the lining. Proceed as follows:

1— a. Energize the brake coil, b. Turn screw "C" counterclockwise to adjust the sounding pin "E" on the inner armature. c. Turn nuts "A" clockwise to adjust sounding pin "E" on the outer armature. d. De-energize the coil and check the sounding pins. e. Repeat until both sounding pins are flush with the surface when pressed inward.

2—Lubricate all fittings after each re-adjustment with Warren Refining and Chemical Co. Plastilube #2 or equal.

3—It is recommended that the brake shoe linings be replaced when the lining thickness at the center of the shoe has decreased to about 1/8 inch.

TORQUE ADJUSTMENT

Size of Brake	Winding	Duty	Rated Torque (Lbs. Ft.)	Turn Each Screw Counter-clockwise to solid	Back Off Turns of Each Screw from Solid
30"	Shunt	Intermittent	9000	x	0
	Shunt	Continuous	6750	x	4
	Series	½ hour	9000	x	0
	Series	1 Hour	6000	x	5

TORQUE LB. FT.	CW TURNS FROM SOLID	APPROX. SPRING LENGTH
9000	0	9.25"
8000	1½	9.50"
7000	3½	9.75"
6750	4	9.875"
6000	5	10.00"
5000	7	10.25"

FOR RENEWAL PARTS SEE DRAWING B70-7063 SHEET 1

ORDER NO DM53-3201-10

A	B70-7063 WAS B70-7065	RAC ENR	REZ 2-75	E			
		DM53-3201-10					
B				F			
C				G			
D				H			

TITLE: INSTALLATION AND INSTRUCTION DRAWING FOR BULLETIN 506-30" BRAKE

REQUIREMENTS OF 30-2500 SHALL APPLY TO THIS DRAWING UNLESS OTHERWISE SPECIFIED. DIMENSIONS BEFORE COATING ARE SPECIFIED — ALLOWANCES HAVE BEEN MADE FOR COATINGS EXCEPT ON THREADS.

CUTLER • HAMMER

BASIC SPECS SUMMARY

DR. R. A. Carr 1-13-75
CHK. R. Kischer 1-22-75
APP. R. E. ZEPNICK 2/10/75

RAW MAT. DESCR.
PART NO. SPEC.
SURFACE COATING FIRST ASSEM. WHERE LISTED D88-2624
SCALE SUP'S NON-INTERCHANGEABLE
DO NOT SCALE DRAWING WORK ACCORDING TO DIMENSIONS SUP'D BY NON-INTERCHANGEABLE